ASSEMBLY INSTRUCTION

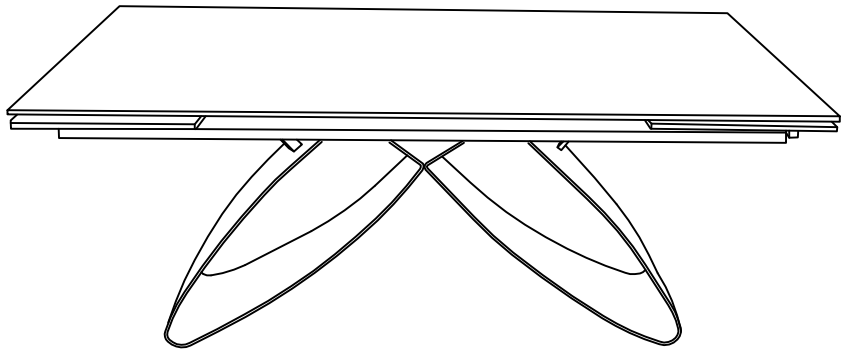

1 . X1 	2 . X1 	3 . X1 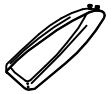	4 . X1 	5 . X2 
A . X10 	B . X18 	C . X4 	D . X1 	E . X1 
F . X4 				

1

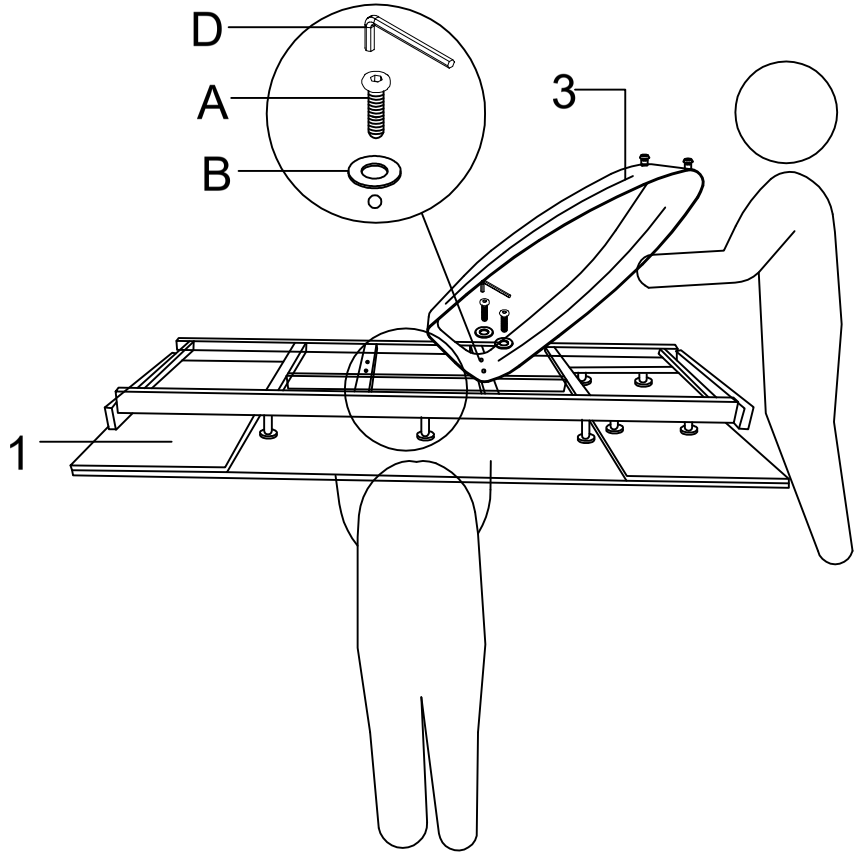

2

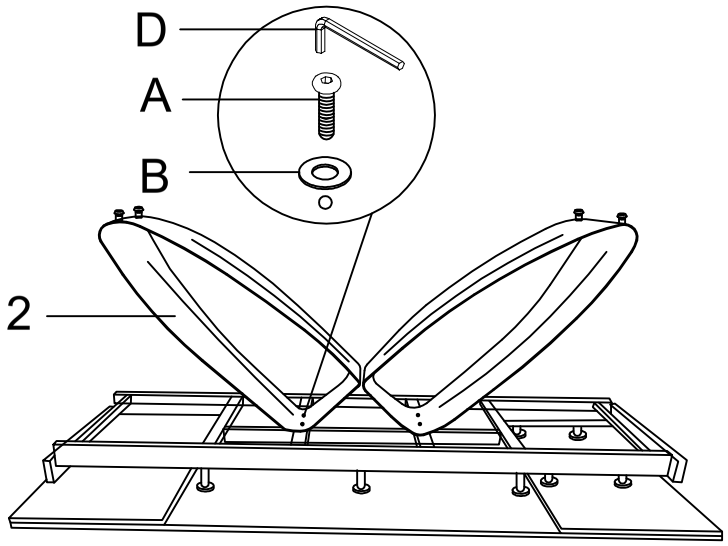

4

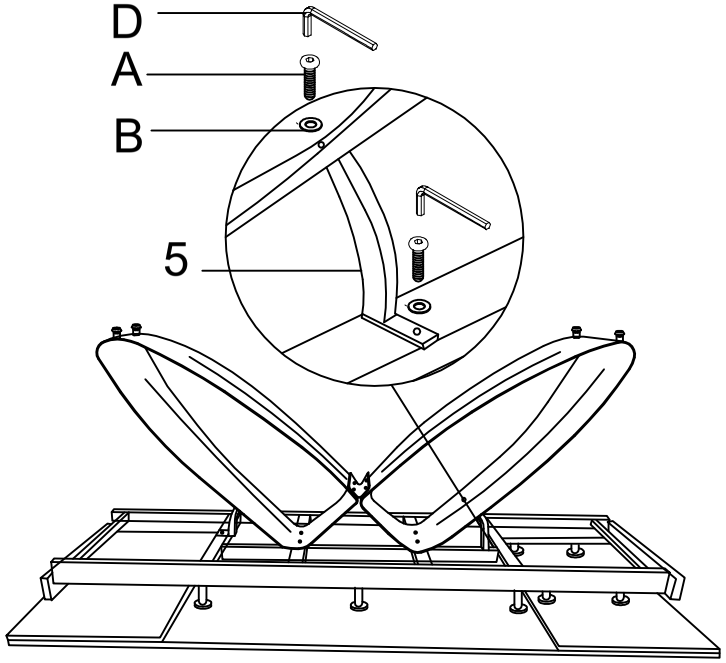

3

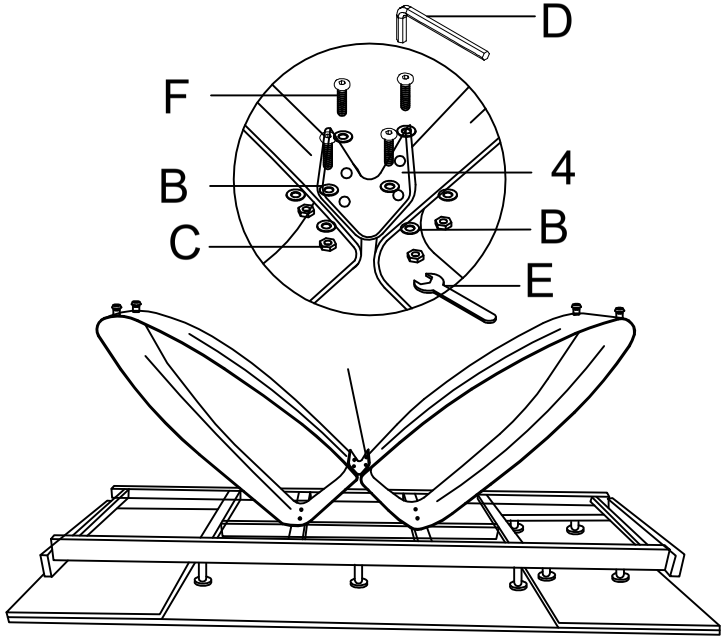

5

